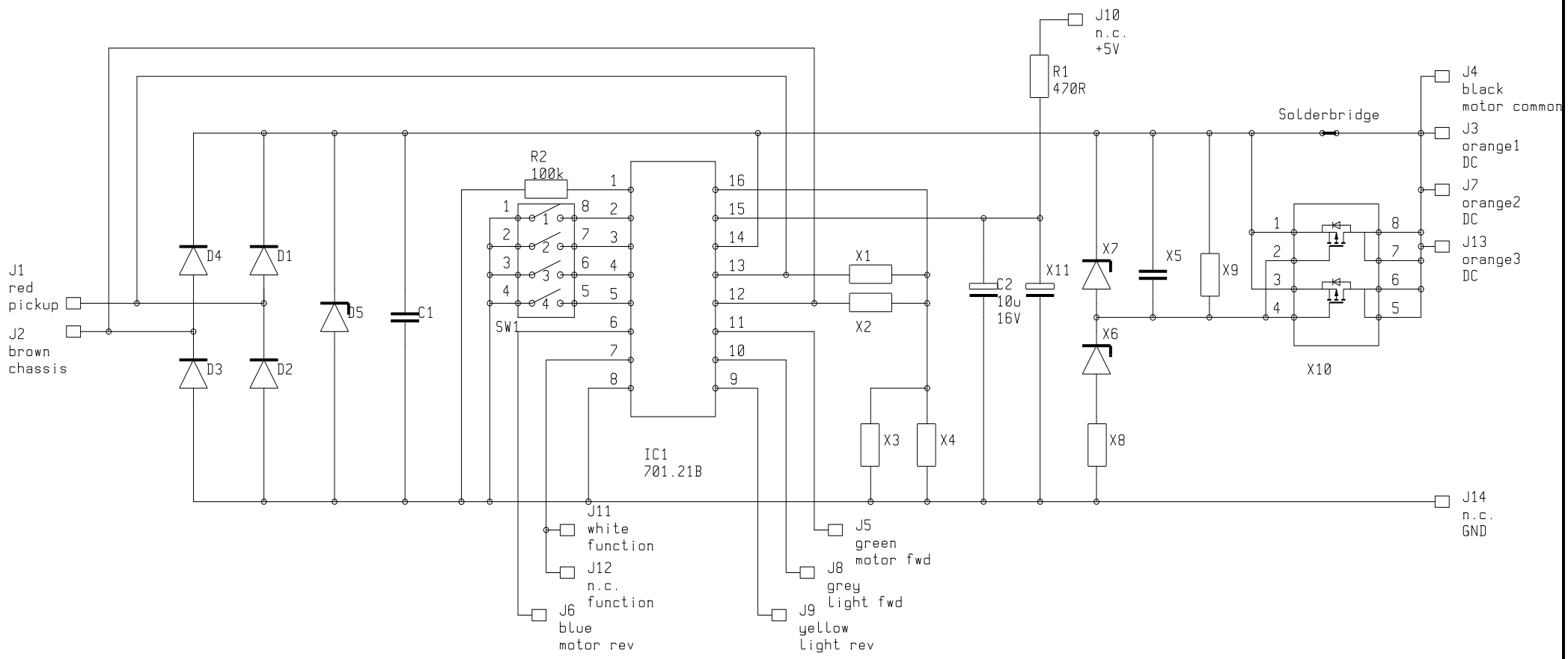

Märklin 66031

bogobit

Sheet: 1/1

GS 20001014

Information is provided "as is" without liability. Use at your own risk.